Variable Optical Delay Line

Description:

The Optical Delay Line could be adjusted by manual lead screw or servo motor. Low insertion loss and high reliability make this device ideal for integration in optical coherence tomography system.

Features:

- Low Insertion Loss
- High Extinction Ratio
- Excellent Environmental Stability

Application:

- Fiber Optics Components
- Medical Treatment
- Optical Coherence Tomography (OCT) Systems

Laser Specifications:

Electrical/Optical Characteristics (Tsub=25°C, CW bias unless stated otherwise)

Parameters		Unit	Values
Center Wavelength		nm	850, 1064, 1310 or 1550
Operating Wavelength Range		nm	±40
Optical Delay Range		ps	0 ~ 530
Zero Point Delay Offset**		ps	170
Readout Scale Resolution		mm	1.0
Max. Insertion Loss @λc		dB	1.5
Max. Insertion Loss Variation		dB	0.5
Min. Extinction Ratio (Only for PM Fiber)		dB	20
Max. PDL (Only for SM Fiber)		dB	0.1
Min. Return Loss		dB	50
Max. Optical Power (CW)		mW	300
Fiber Type	VDL	-	SM Fiber
	PMVDL	-	PM Panda Fiber
Operating Temperature		°C	0 to+40 (No Condensing)
Storage Temperature		°C	0 to +85 (No Condensing)

Note:

*Above specifications are for device without connector.

*For devices with connectors, IL will be 0.3dB higher (0.5dB higher for 1064nm), ER will be 2dB lower, and RL will be 5dB lower.

*The PM fiber and the connector key are aligned to the slow axis.

**Absolute delay at 0ps setting measured to the edge of the enclosure (excluding caps, boots, and Pigtails).

Package Size:

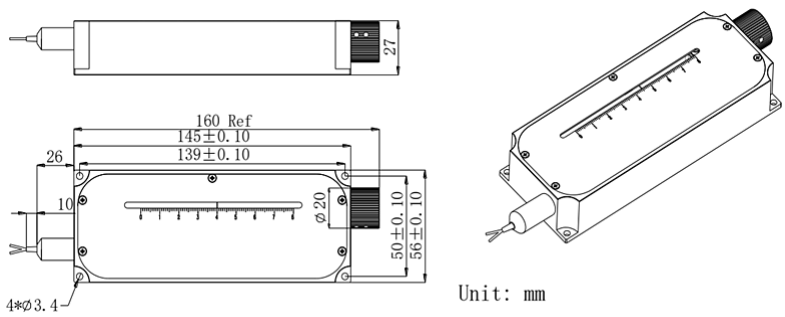

Axis Alignment for PM Fiber: Both Axis Working

Ordering Info:

VDL-①①-②②-③③-④ PMVDL-①①-②②-③③-④			
①①: Center Wavelength	②②: Connector Type	③③: Fiber Jacket Type	④: Fiber
85 - 0850nm	1 - FC/UPC	B - 250um Bare Fiber	Length 1 - 1.0m
06 - 1064nm	2 - FC/APC	L - 900um Loose Tube	S - Specify
31 - 1310m	3 - SC/UPC	S - Specify	
55 - 1550nm	4 - SC/APC		
SS - Specify	N - None S - Specify		