1460nm FP PM Raman Pump Laser Diode

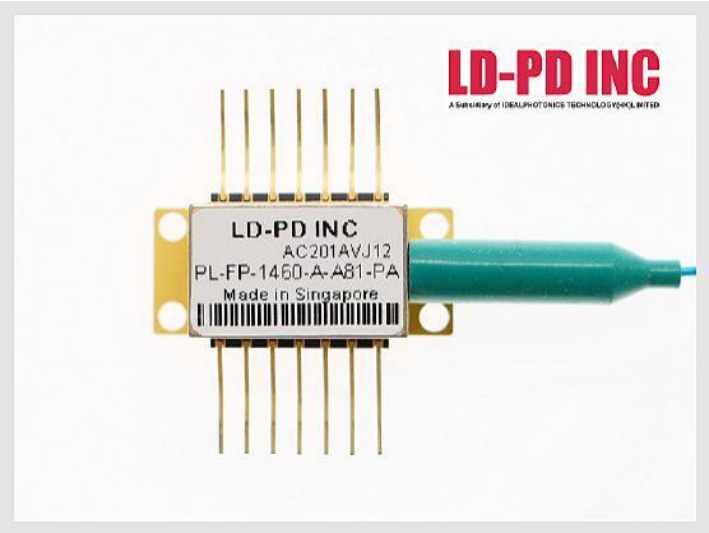

Description:

The PL-FP-1460-A-A81 -PA is 1460nm pump laser modules uses a number of revolutionary design steps and the very latest material technologies to significantly improve scalability of the production process. The semi-cooled 45°C laser diode operation provides for a significant reduction in TEC and overall power consumption. The module meets the stringent requirements of the telecommunications industry including Telcordia GR-468-CORE for hermetic 940 nm pump modules.

The LD-PD Series pump module, which uses Fiber Bragg grating stabilization to lock the emission wavelength, provides a noise-free, narrowband spectrum even under changes in temperature, drive current, and optical feedback. Wavelength selection is available for applications requiring the highest performance in spectrum control with the highest power available.

Features

- Optical output Up to 450mW
- FC-APC connector
- 14-PIN butterfly package
- Wavelength selection available
- Integrated thermoelectric cooler, thermistor, and monitor diode
- High dynamic range
- Excellent low power stability

Application

- Pump Laser
- Dense wavelength division multiplexing (DWDM)
- EDFAs for small package designs
- High bit-rate, high channel-count EDFAs
- CATV distribution

Limit parameter

Electrical/Optical Characteristics (Tsub=25°C, CW bias unless stated otherwise)

Parameter	Symbol	Min	Typ	Max	Unit
Centre Wavelength	λ	1450	1460	1470	nm
Spectral Width	Δλ	1.0	2.0	3.0	nm
Threshold Current	Ith		90	110	mA
Operating Current	Iop		1200	1500	mA
Fiber output Power	Pf	300	400	650	mW
Wavelength Tuning VS Temp	Δλ/T			0.01	nm/°C
Tracking Ratio(0.1Pop < Pf< Pop)1	TR	0.52		1.48	
Tracking error2	TE	-48	-	+48	
Monitor diode responsivity	IBF	0.5		5	uA/mW
Thermistor resistance(Tset = 25°C)3	Rth	9.5	-	10.5	KΩ
PD Dark Current (VRD=5V)	Id			0.1	uA
Extinction Ratio (PM VERSION)	PER	17	20		dB
Coupled Fiber Type	SMF-28E				
Forward Voltage	Vf		1.8	2.6	V
Thermistor Resistance	RT	9.5	10	10.5	KΩ
Thermistor Temp. Coefficient			-4.4		%/°C
Connector	None or FC/APC				
Thermistor Resistance					

1. The tracking ratio is a measure of the front-to-back tracking when the output power is varied. On a plot of optical power versus back-face photocurrent, a straight line is drawn between the minimum power (30 mW) and the operating power (Pop) points. The tracking ratio is defined as the ratio between measured optical power (shown as data points on the plot) to the value derived from the straight line.
2. The tracking error is defined as the normalized change of output power relative to Pf at 25°C, that is, (Pf – Pf_25)/Pf_25, over case temperature range of 0 to 75°C, at constant back face monitor current corresponding to the lowest back face monitor current at Pf= Pop of 0°C, 25°C, 75°C.
3. Datasheet for Calculating Temperature from the resistance of the Thermistor is available now. You can contact us for details.

Spectrum

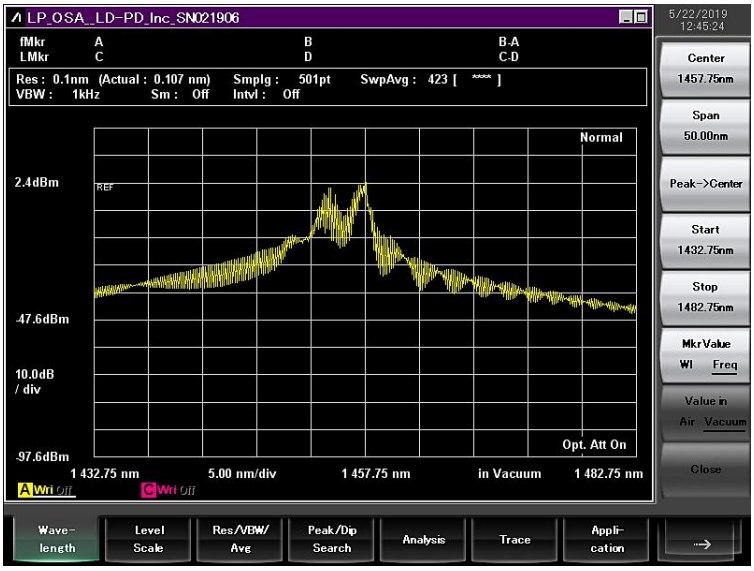

L-I Curve

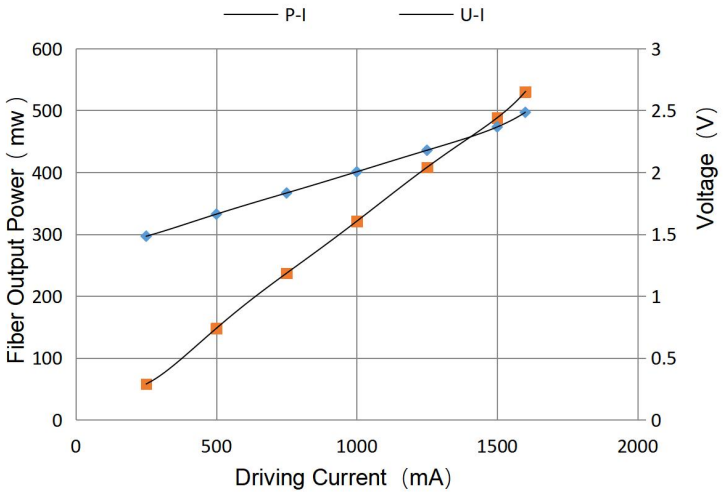

Package Size

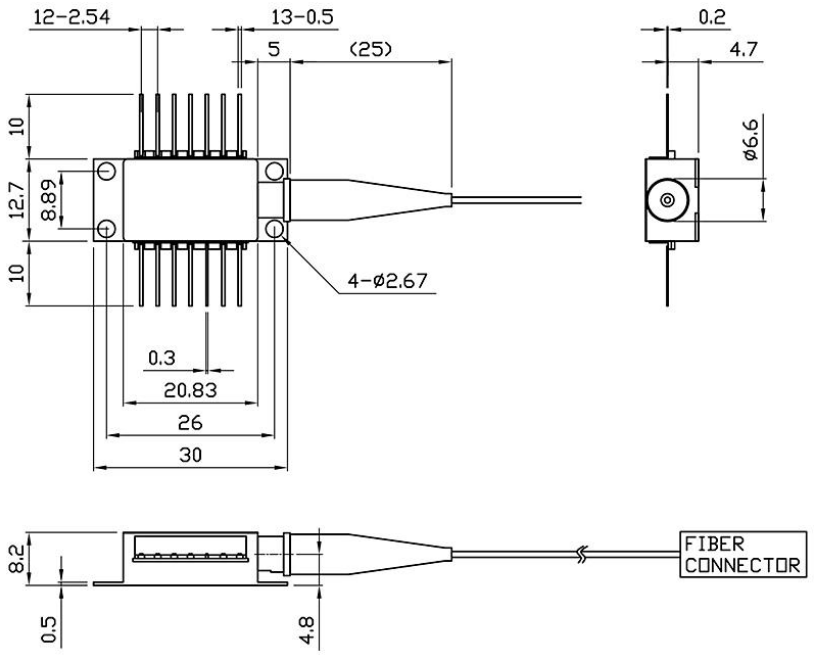

Pin definition

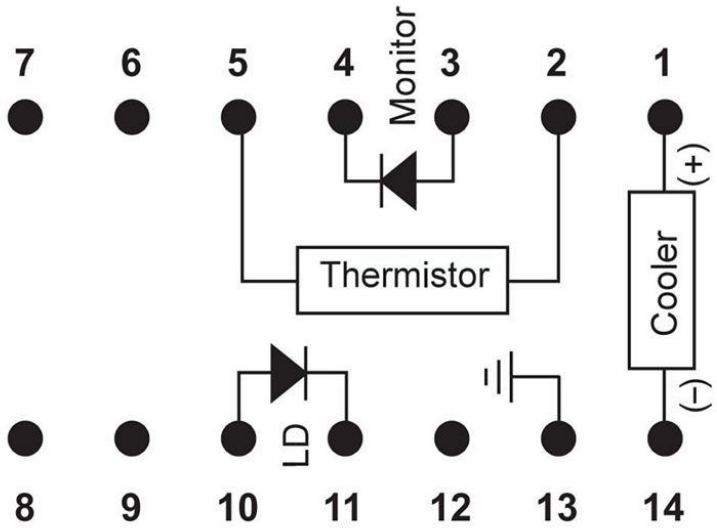

1	Thermoelectric Cooler (+)	8	N/C
2	Thermistor	9	N/C
3	PD Monitor Anode (-)	10	Laser Anode (+)
4	PD Monitor Cathode (+)	11	Laser Cathode (–)
5	Thermistor	12	N/C
6	N/C	13	Case Ground
7	N/C	14	Thermoelectric Cooler (–)

SMF-28E Fiber Nominal Characteristics and Tolerances

Parameters	Specification
Cut off wavelength	1300nm
Max Attenuation	2.1dB/km
Cladding Diameter	125um
Coating Diameter	250um
Core Cladding Concentricity	≤0.5um
Mode Field diameter	9.5um

Absolute Maximum Ratings

Item	Symbol	Unit	Min	Typ	Max	Testing Condition
Case Temperature	TOP	℃	-5	25	70	
Chip Temperature	TLD	℃	+10	25	50	
Operating Current	If-max	mA	0	850	1500	
Forward Voltage	VR	V	0.8	1.2	1.8	
TEC Current	I TEC	A	-	1.2	2.0	
Tec Voltage	VTEC					
Axial Pull Force		N	-	-	5N	3x10s
Side Pull Force		N	-	-	2.5N	3x10s
Fiber Bend Radius			16mm			-
Reverse Voltage（LD）		V	-	-	1.8	C=100pF,R=1.5KΩ, HBM
Reverse Voltage(PD)	VPD	V	-	-	10	C=100pF,R=1.5KΩ, HBM
LD electrostatic Discharge	VESD-LD	V		-	1000	
PD electrostatic Discharge	VESD-PD	V		-	500	
PD Forward Current	IPF	mA		-	10	
Lead Soldering time		S		-	10s	300℃
Store Temperature	TSTG	℃	-40	-	+85	2000hr
Operating Temperature	TOP	℃		-		
Relative Humidity	RH		5%	-	95%	Noncondensing

Absolute maximum ratings are the maximum stresses that may be applied to the module for short periods of time without causing damage and are listed in Table 5.Stresses in excess of the absolute maximum ratings can cause permanent damage to the device. Exposure to absolute maximum

ratings for extended periods of time or exposure to more than one absolute maximum rating simultaneously may adversely affect device reliability. Specifications may not necessarily be met under these conditions.

Ordering Info

PL-FP-□□□□-☆-A8▽-XX

□□□□：Wavelength

405:405nm

633:633nm

680:680nm

850:850nm

915:915nm

940:940nm

980:980nm

*****

1460:1460nm

1550：1550nm

☆ ：Output Power

A：300mW

B：400mW

C：500mW

D：600mW

▽：Wavelength Tolerance

1：±1nm

2：±2nm

XX: Fiber and Connector Type

SA=SMF-28E+ FC/APC

SP=SMF-28E+ FC/PC

PP=PM Fiber+ FC/PC

PA=PM Fiber+ FC/APC